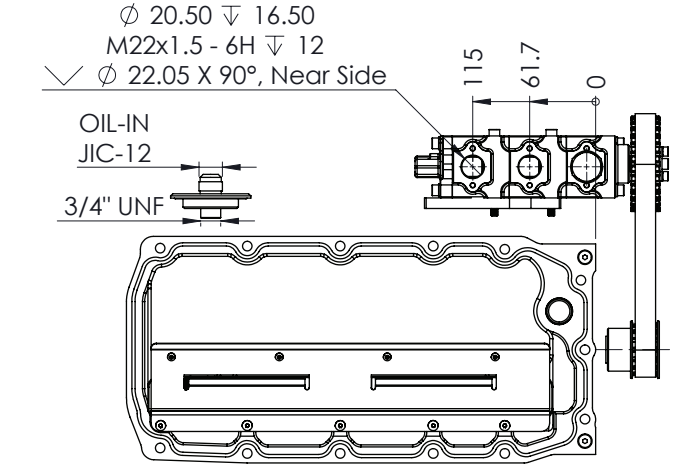

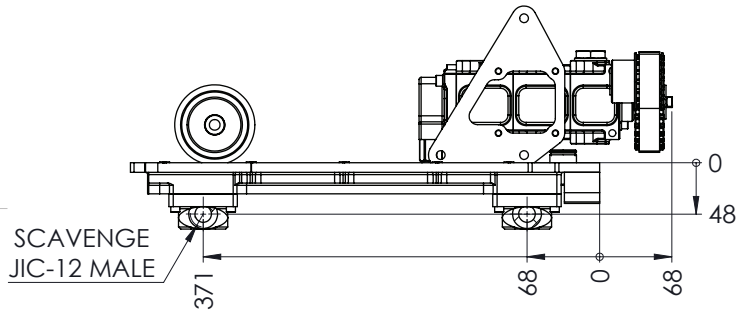

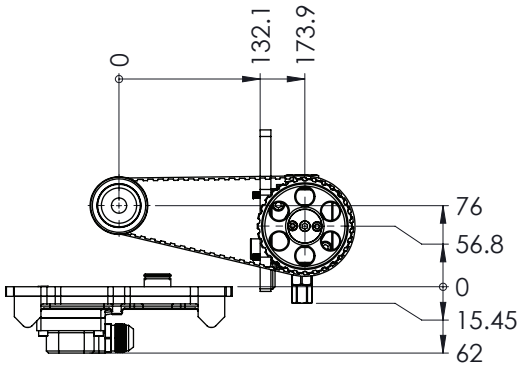

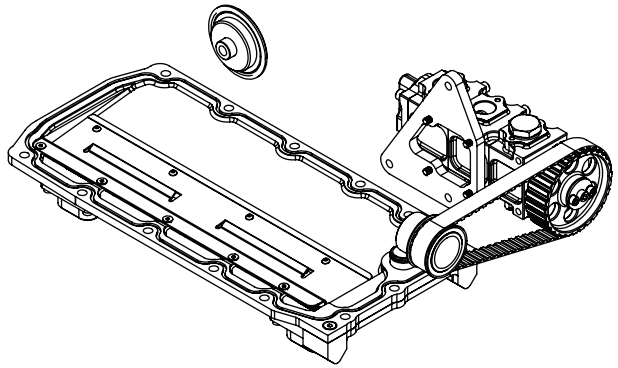

ISOMETRIC VIEW

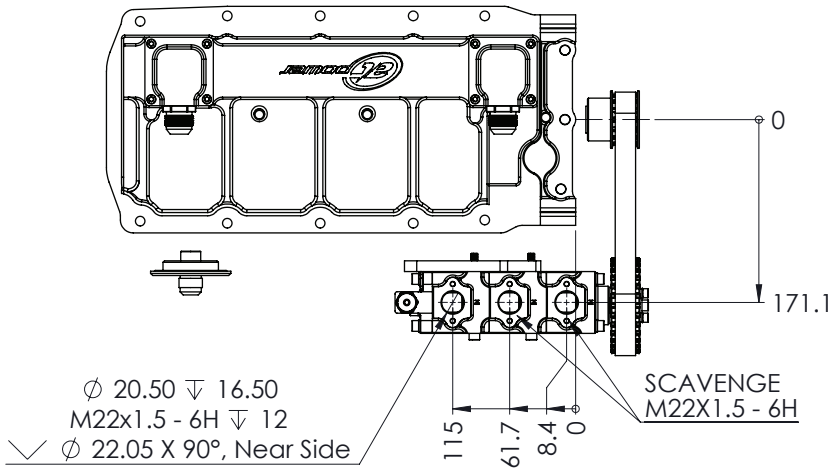

NOTES:

1. DISPLACEMENT PER REVERLUTION PER STAGE =11.9 CC/REV
2. DISPLACEMENT AT 1000 PUMP RPM = 11.9 LT/MIN
3. DRIVE RATIO - 16/30

COPYRIGHT (c) 2013
AT POWER LTD
UNIT 9, CHESTNUT DRIVE, WYMONDHAM,
NORFOLK, UK, NR18 9SB

THIRD ANGLE PROJECTION

SCALE 1:5	WEIGHT 5.1 kg
DRAWN-	S.HOW
DATE -	23/01/19
CHECKED -	S.HOW
APPROVED -	A.CLIFTON

UNLESS OTHERWISE STATED:
DIMENSIONS IN MILLIMETRES
TOLERANCES: LINEAR ± 0.1 ANGULAR ± 0.5°
SURFACE FINISH
DRAWING STANDARDS TO ATQS 6003
DATE FORMAT: DD/MM/YY

THIS DESIGN IS THE PROPERTY OF AT POWER THROTTLES LTD AND MUST NOT BE REPRODUCED OR COMMUNICATED WITHOUT AUTHORITY

CAD PLOT DO NOT SCALE

MATERIAL
SEE COMPONENT PARTS

FINISH
SEE COMPONENT PARTS

DRAWING TITLE
ASSY - SUMP KIT - FORD - SIGMA - 3/4" BELT - INTAKE

DRAWING NUMBER
105-102-00016

SHEET 2 OF 2 A3